CASE 1
REINFORCED CONCRETE BEAM
FOR 4" TO 24" I.D. PIPE

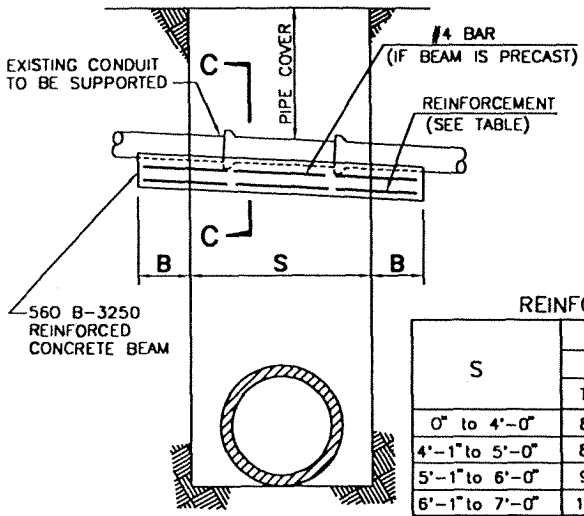

NOTES

1. WIOTH OF BEAM SHALL EQUAL O.D. OF SUPPORTEO PIPE. MINIMUM WIDTH SHALL BE 6".
2. IF SUPPORTEO PIPE IS BEDDED IN CONCRETE, BEAM WIDTH SHALL BE EQUAL BEDDING WIDTH.
3. IF BEAM IS PRECAST, ENDS OF BEAM SHALL BE FULLY BEDDED IN 420-C-2000 CONCRETE FOR LENGTH "B". THE BEDDING SHALL HAVE A MINIMUM THICKNESS OF 4". CLASS "C" MORTAR SHALL BE PLACED BETWEEN TOP OF BEAM AND SUPPORTED PIPE TO PROVIDE MINIMUM BEARING SHOWN.
4. THIS CASE IS PERMITTED ONLY IF THE TRENCH WALLS ARE FIRM ANO UNYIELDING.
5. MAXIMUM SPACING OF BARS SHALL BE 4" O.C.

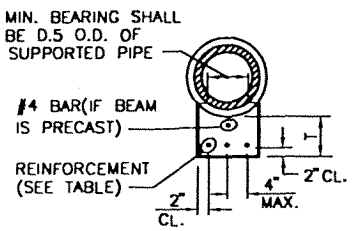

SECTION C-C

REINFORCED CONCRETE BEAM (DIMENSIONS AND REINFORMENT)

S	PIPE COVER														
	0' to 8'-0"			8'-1" to 12'-0"			12'-1" to 16'-0"			16'-1" to 20'-0"			20'-1" to 25'-0"		
	T	BARS	B	T	BARS	B	T	BARS	B	T	BARS	B	T	BARS	B
0" to 4'-0"	8"	#4	1'-6"	8"	#4	1'-6"	9"	#4	1'-6"	10"	#4	1'-6"	10½"	#4	1'-6"
4'-1" to 5'-0"	8"	#4	1'-6"	9½"	#4	1'-6"	11"	#4	1'-6"	12"	#4	1'-6"	12½"	#5	1'-6"
5'-1" to 6'-0"	9"	#4	1'-6"	11"	#5	1'-6"	12½"	#5	1'-6"	13½"	#5	2'-0"	14½"	#5	2'-0"
6'-1" to 7'-0"	10"	#5	1'-6"	12½"	#5	2'-0"	14½"	#5	2'-0"	15½"	#5	2'-0"	16½"	#6	2'-0"
7'-1" to 8'-0"	11"	#5	1'-6"	14"	#5	2'-0"	16"	#5	2'-0"	17½"	#6	2'-6"	19"	#6	2'-6"
8'-1' to 9'-0"	12½"	#5	2'-0"	15½"	#6	2'-6"	17½"	#6	2'-6"	19½"	#6	2'-6"	21"	#6	2'-6"
9'-1" to 10'-0"	13½"	#6	2'-0"	17"	#6	2'-6"	19½"	#6	3'-0"	21½"	#6	3'-0"	23"	#6	3'-0"
10'-1" to 11'-0"	14½"	#6	2'-6"	18½"	#6	3'-0"	21"	#6	3'-0"	23½"	#6	3'-0"	25"	#7	3'-0"
11'-1" to 12'-0"	15½"	#6	2'-6"	20"	#6	3'-0"	23"	#7	3'-6"	25½"	#7	3'-6"	27"	#7	3'-6"
12'-1" to 13'-0"	17"	#6	3'-0"	21½"	#7	3'-6"	24½"	#7	3'-6"	27½"	#7	4'-0"	29"	#7	4'-0"
13'-0" to 14'-0"	18"	#7	3'-0"	23"	#7	3'-6"	26½"	#7	4'-0"	29½"	#7	4'-0"	33½"	#7	4'-0"
14'-1' to 15'-0"	19"	#7	3'-0"	25"	#7	4'-0"	28"	#7	4'-0"	31½"	#7	4'-6"			
15'-1" to 16'-0"	20½"	#7	3'-6"	26½"	#7	4'-0"	30"	#8	4'-6"						
16'-1" to 17'-0"	21½"	#7	3'-6"	28"	#8	4'-6"									
17'-1" to 18'-0"	22½"	#8	4'-0"	29½"	#8	4'-6"									

CASE 2
CONCRETE WALL

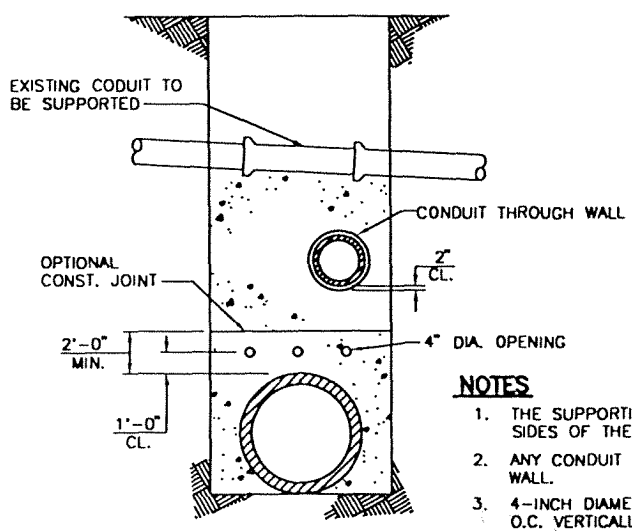

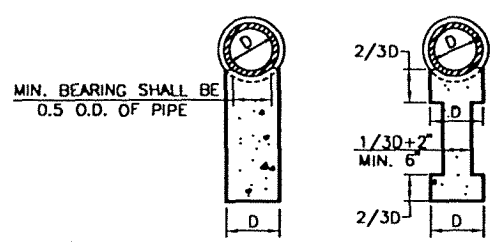

WALL SECTION

NOTES

1. THE SUPPORTING WALL SHALL HAVE A FIRM BEARING ON THE SUBGRADE AND AGAINST THE SIDES OF THE EXCAVATION.
2. ANY CONDUIT PASSING THROUGH THE WALL SHALL HAVE 2-INCH CLEARANCE FROM THE WALL.
3. 4-INCH DIAMETER OPENINGS THROUGH THE WALL AT 2 FT. O.C. HORIZONTALLY AND AT 5 FT. O.C. VERTICALLY SHALL BE PROVIDED TO PREVENT UNEQUAL PRESSURE RESULTING FROM JETTEO BACKFILL.
4. IF SUPPORTED PIPE IS BEDDED IN CONCRETE, MINIMUM THICKNESS OF WALL SHALL EQUAL BEDDING WIDTH.
5. BRICK WITH MORTAR JOINTS MAY BE USEO IN LIEU OF CONCRETE FOR WALLS UP TO 5 FT. IN HEIGHT OR LENGTH.

REV.	APPR. BY	DATE

REV.	APPR. BY	DATE

CITY OF Oxnard
Department of Public Works

SUPPORTS FOR CONDUIT ACROSS TRENCHES

DRAWN: STAFF CKD.: STAFF

APPR. Granville M. Bowman

STANDARD PLAN 2002

PLATE 404

SHEET 1 OF 2

CASE 3
DUCTILE IRON PIPE

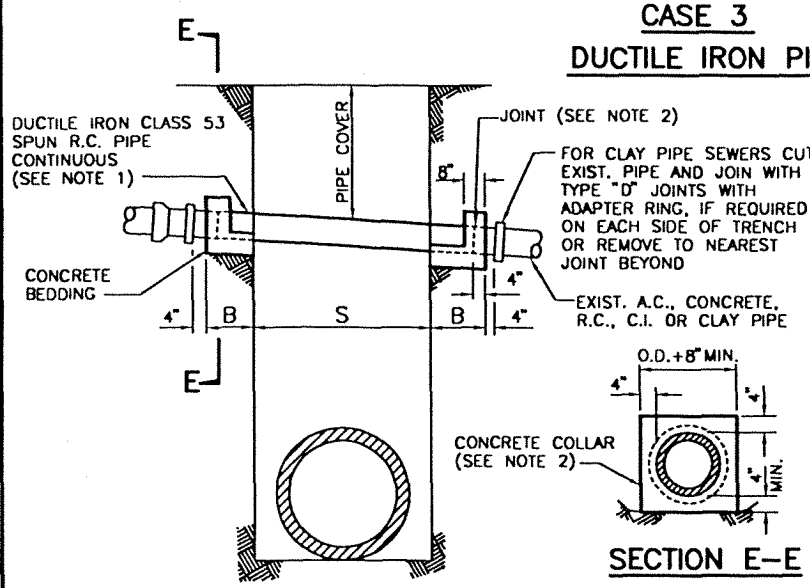

ALLOWABLE SPANS AND MIN. REQUIRED BEARING FOR DUCTILE IRON PIPE

DEPTH OF COVER	6" PIPE		8" PIPE		10" PIPE	
	S(Max)	B(Min)	S(Max)	B(Min)	S(Max)	B(Min)
0" TO 8'-0"	11'-0"	1'-6"	13'-6"	1'-6"	16'-6"	2'-0"
8'-1" to 16'-0"	8'-0"	1'-6"	10'-0"	2'-0"	12'-0"	2'-6"
16'-1" to 25'-0"	7'-0"	1'-6"	9'-0"	2'-0"	10'-6"	2'-6"

NOTES

1. 2000-D SPUN R.C. PIPE OF SAME DIAMETER AS THE EXISTING PIPE MAY BE USED ONLY WHEN THE EXISTING PIPE IS A.C., CONCRETE OR R.C. PIPE AND THE TRENCH WIDTH IS 5'-0" OR LESS.
2. THE CONCRETE COLLAR JOINT SHALL BE USED FOR JOINTS IN STORM DRAIN PIPE.

CASE 4
COLUMN SUPPORT WITH REINFORCED CONCRETE BEAM

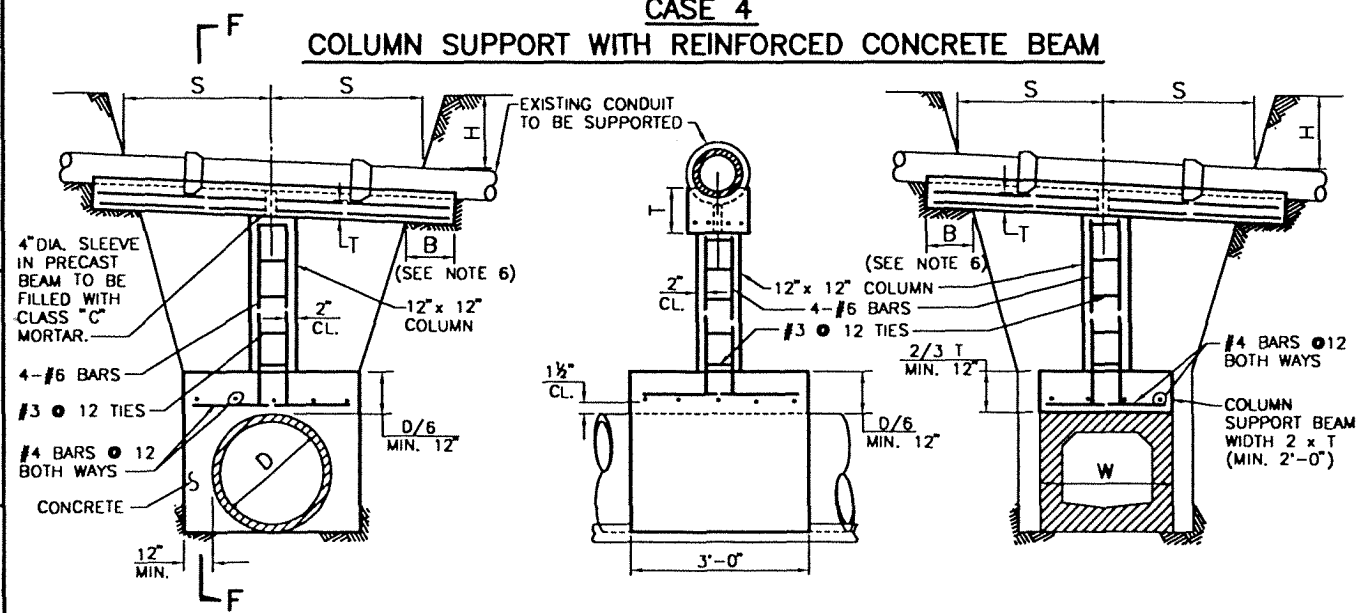

NOTES

1. SPAN "S" SHALL BE MAXIMUM 18 FT. FOR EARTH COVER 8 FT. OR LESS, 12 FT. FOR EARTH COVER 16 FT. OR LESS, AND 10 FT. FOR OVER 16 FT. EARTH COVER.
2. ALL CONCRETE SHALL BE 560-B-3250.
3. WHEN THE PIPE TO BE SUPPORTED CROSSES THE TRENCH ON A SKEW ANGLE, THE WALL OR BEAM WHICH SUPPORTS THE COLUMN SHALL BE CONSTRUCTED AT RIGHT ANGLE TO THE TRENCH.
4. SUPPORT SYSTEM MAY BE USED OVER CAST-IN-PLACE STRUCTURES.
5. BACKFILL ABOVE THE SUPPORT BEAM SHALL NOT BE PLACED UNTIL 72 HOURS AFTER THE SUPPORT IS POURED.
6. REINFORCED CONCRETE BEAM DIMENSIONED AND REINFORCED PER TABLE UNDER CASE 1.

GENERAL NOTES

1. "S" IS THE SPAN OF THE PIPE SUPPORT ALONG IT'S CENTERLINE.
2. "B" IS THE LENGTH OF BEARING OF THE SUPPORT AGAINST UNDISTURBED EARTH MEASURED ALONG THE PIPE CENTERLINE.
3. CASE 2 SHALL BE USED FOR PARTIAL CROSSINGS, EXCEPT THAT WHERE THE DISTANCE FROM A SEWER CHIMNEY TO UNDISTURBED EARTH IS 18 INCHES OR LESS, THE TRENCH BACKFILL MAY BE DENSIFIED TO 18 INCHES ABOVE A HOUSE CONNECTION SEWER AND THEN RE-EXCAVATED FOR THE PIPE INSTALLATION.
4. ANY SEWER OR STORM DRAIN EXPOSED OR PARTIALLY EXPOSED IN A TUNNEL EXCAVATION SHALL BE SUPPORTED WITH A WALL CASE 2.
5. IF BEDDING IS REMOVED FROM THE EXISTING PIPE THAT WILL REMAIN IN PLACE, THE PIPE SHALL BE EMBEDDED WITH CONCRETE.
6. UNLESS OTHERWISE INDICATED, CONCRETE SHALL BE CLASS 420-C-2000.

REV.	APPR. BY	DATE

REV.	APPR. BY	DATE

CITY OF Oxnard
Department of Public Works

SUPPORTS FOR CONDUIT ACROSS TRENCHES

DRAWN: STAFF CKD.: STAFF

APPR. Granville M. Bowman

STANDARD PLAN 2002

PLATE 404

SHEET 2 OF 2